BEP Marine DC Circuit Breaker Panel

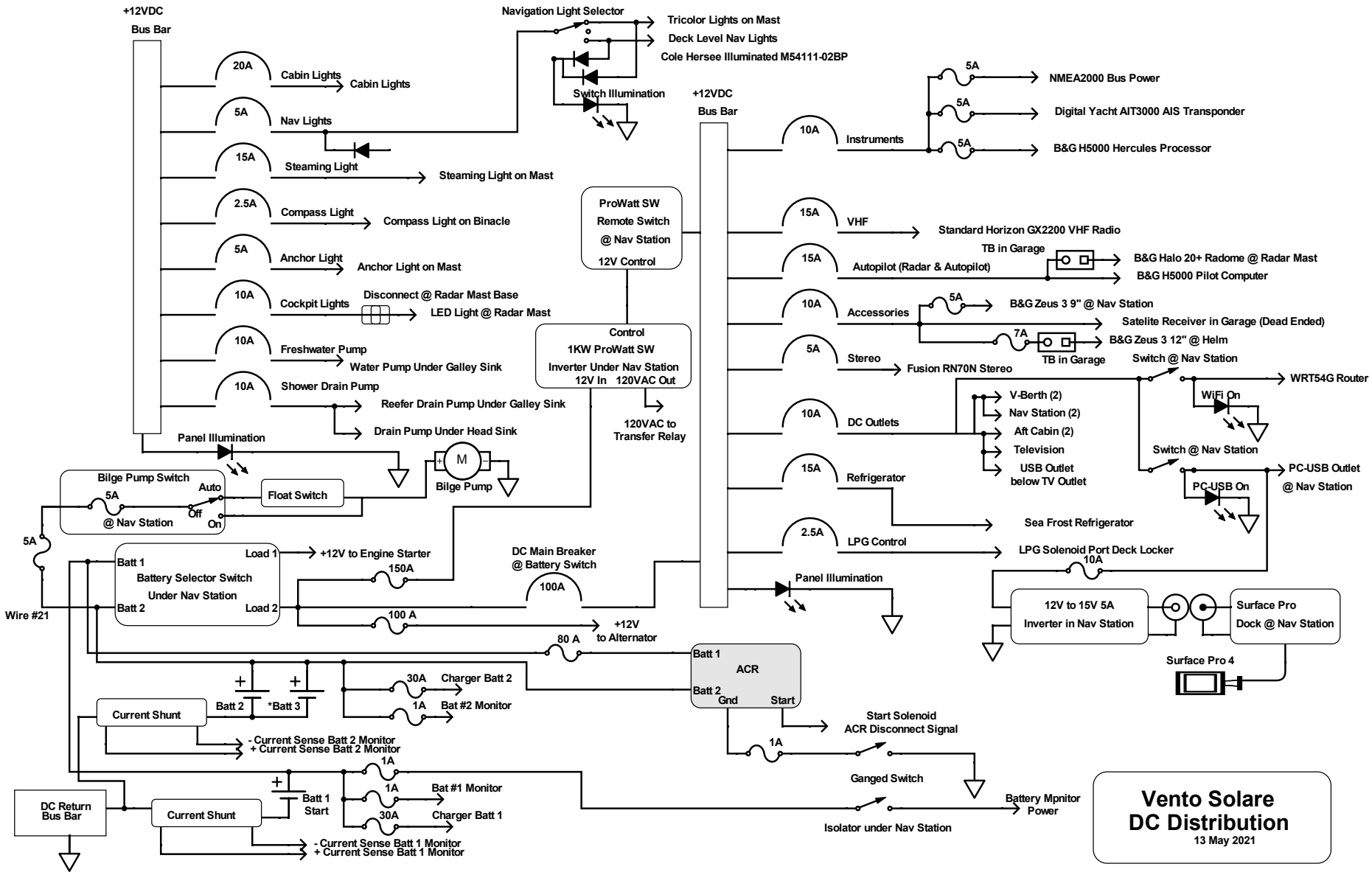

Vento Solare
DC Distribution
13 May 2021